Jagamine

$$A_1 \text{ ja } A_2 > 0;\ \ A_1 < A_2 \Rightarrow \frac{A_1}{A_2} = 0,\ x_{-1}\, x_{-2} \ldots x_{-k}$$

$$x_{-1} = 1 \Rightarrow \text{jagatis} \geq 0{,}5 \Rightarrow A_1 \geq 0{,}5\ A_2 \Rightarrow$$

$$\Rightarrow 2A_1 \geq A_2 \Rightarrow 2A_1 - A_2 \geq 0$$

$$x_{-1} = 0 \Rightarrow 2A_1 - A_2 < 0$$

Rg1 : jagatav (A_1)
Rg2 : jagaja (A_2)
Rg3 : jagatis (A_1 / A_2)
L : järkude arv

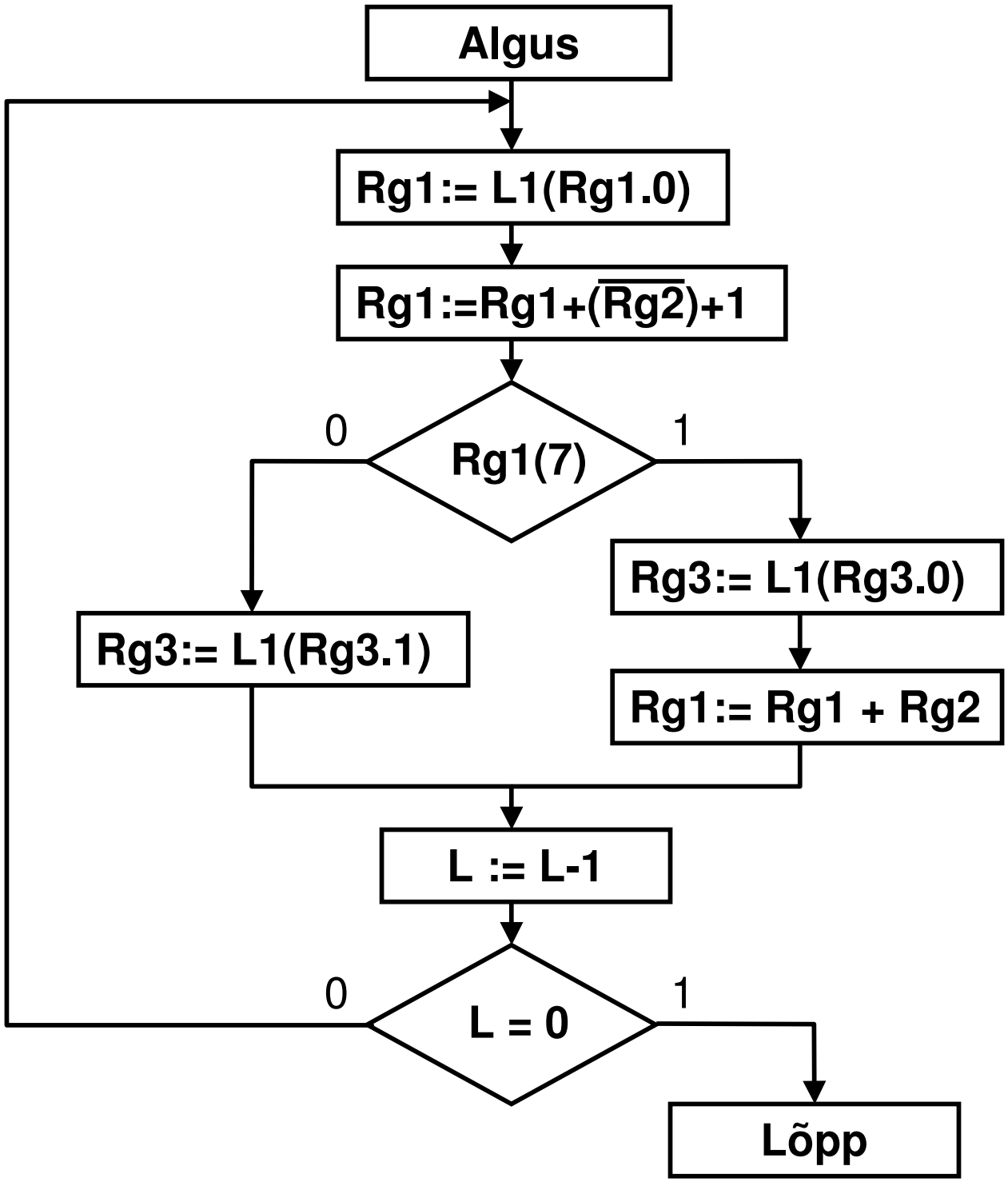
Algus
Rg1:= L1(Rg1.0)
Rg1:=Rg1+($\overline{Rg2}$)+1
Rg1(7)
0
1
Rg3:= L1(Rg3.1)
Rg3:= L1(Rg3.0)
Rg1:= Rg1 + Rg2
L := L-1
L = 0
0
1
Lõpp

Rg1 := 0,01110 jagatav
Rg2 := 0,10110 jagaja
Rg3 := 0,00000 jagatis
L := 5

Rg1 := 0,11100 (2*A)
Rg2+1 := 1,01010 (-A_2)
Rg1 := 0,00110 (Rg1 > 0)
Rg3 := 0,00001
L := 4

Rg1 := 0,01100
Rg2+1 := 1,01010
Rg1 := 1,10110 (Rg1 < 0)
Rg3 := 0,00010
Rg1 := 0,01100 (jäägi taastamine)
L := 3

Rg1 := 0,11000
Rg2+1 := 1,01010
Rg1 := 0,00010 (Rg1 > 0)
Rg3 := 0,00101
L := 2

$\overline{Rg2}$+1 := Rg1 := 0,00100
$\overline{Rg2}$+1 := 1,01010
Rg1 := 1,01110 (Rg1 < 0)
Rg3 := 0,01010
Rg1 := 0,00100 (jäägi taastamine)
L := 1

$\overline{Rg2}$+1 := Rg1 := 0,01000
$\overline{Rg2}$+1 := 1,01010
Rg1 := 1,10010 (Rg1 < 0)
Rg3 := 0,10100
Rg1 := 0,01000 (jäägi taastamine)
L := 0

Rg1 := 0,4375
Rg2 := 0,6875
Rg3 := 0,6363 (0,625)

Täisarvude jagamine

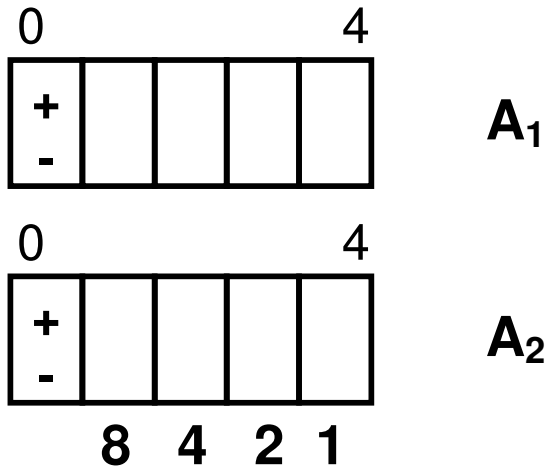

$$\frac{A_1}{A_2} \geq 8 \Rightarrow A_1 \geq 8 \cdot A_2 \Rightarrow A_1 - 8A_2 \geq 0$$

N:	**0 1110**	A_1	**(+14)**
	0 0011	A_2	**(+3)**
	0 0100	$\frac{A_1}{A_2}$	**(+4)**
	0 0010	**jääk (+2)**	

Jagamine jäägi taastamiseta

1. $2A_1 - A_2 < 0 \Rightarrow 2A_1 - A_2 + A_2$

2. $2A_1 - A_2 < 0 \Rightarrow L1 \Rightarrow 4A_1 - 2A_2$

Vaja on $4A_1 - A_2$

Seega $4A_1 - 2A_2 + A_2$

Rg1 - jagatav
Rg2 - jagaja
Rg3 - 0 (jagatis)
L - järkude arv

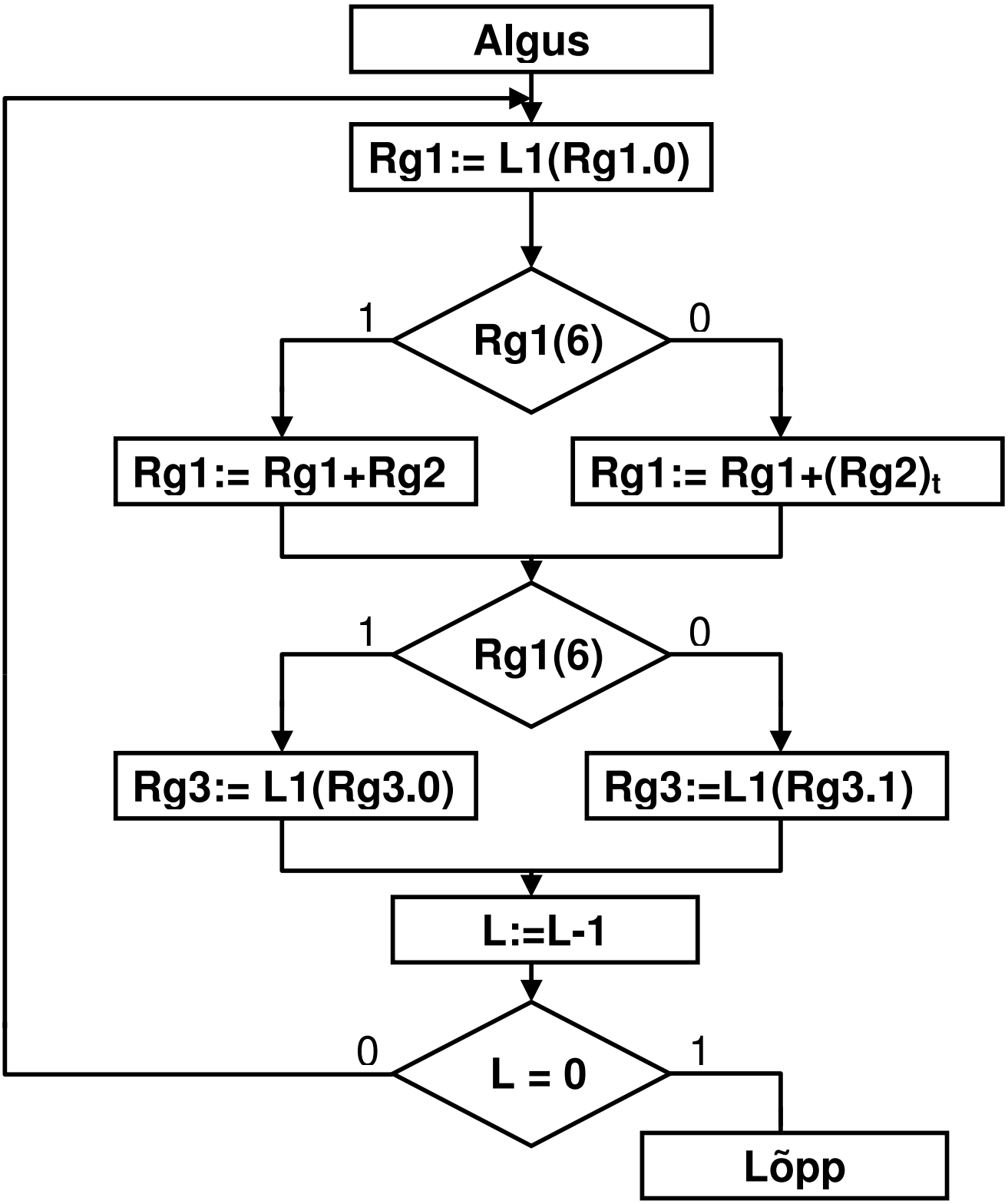
Algus
Rg1:= L1(Rg1.0)
1
Rg1(6)
0
Rg1:= Rg1+Rg2
Rg1:= Rg1+(Rg2)t
1
Rg1(6)
0
Rg3:= L1(Rg3.0)
Rg3:=L1(Rg3.1)
L:=L-1
0
L = 0
1
Lõpp

Rg1 := 00,01110
Rg2 := 00,10110 **$(Rg2)_t$ = 11,01010**
Rg3 := 00,00000
L: = 5

Rg1 := 00,11100	**(Rg1>0)**	
$(Rg2)_t$:= 1<u>1,01010</u>		
Rg1 := 00,00110	**(Rg1>0)**	
Rg3 := 00,00001		**L := 4**
Rg1 := 00,01100	**(Rg1>0)**	
$(Rg2)_t$:= 1<u>1,01010</u>		
Rg1 := 11,10110	**(Rg1<0)**	
Rg3 := 00,00010		**L := 4**
Rg1 := 11,01100	**(Rg1<0)**	
Rg2 := 0<u>0,10110</u>		
Rg1 := 00,00010	**(Rg1<0)**	
Rg3 := 00,00101		**L :=2**
Rg1 := 00,00100	**(Rg1<0)**	
$(Rg2)_t$:= 1<u>1,01010</u>		
Rg1 := 11,01110	**(Rg1<0)**	
Rg3 := 00,01010		**L := 1**
Rg1 := 10,11100	**(Rg1<0)**	
Rg2 := 0<u>0,10110</u>		
Rg1 := 11,10010	**(Rg1>0)**	
Rg3 := 00,10100		**L := 0**

Negatiivsete arvude jagamine

A_2	$2A_1 - A_2$ (A_1)	x_{-i}	A_2 saatmine
+	+	1	$- A_2$
+	-	0	$+ A_2$
-	+	0	$+ A_2$
-	-	1	$- A_2$

Tulemus : pöördkoodis

Lisandub : 0. tsükkel - märk

$$|A_1| < |A_2|$$

1) $A_1 > 0 \qquad A_2 > 0$
   $A_1 - A_2 < 0 \Rightarrow$ märk = 0
   $2(A_1 - A_2) + A_2 = 2A_1 - A_2$

2) $A_1 < 0 \qquad A_2 > 0$
   $A_1 + A_2 > 0 \Rightarrow$ märk = 1
   $2(A_1 + A_2) - A_2 = 2A_1 + A_2$

3) $A_1 > 0 \qquad A_2 < 0$
   $A_1 + A_2 < 0 \Rightarrow$ märk = 1
   $2(A_1 + A_2) - A_2 = 2A_1 + A_2$

4) $A_1 < 0 \qquad A_2 < 0$

$A_1 - A_2 > 0 \Rightarrow$ **märk = 0**

$2(A_1 - A_2) + A_2 = 2A_1 - A_2$

Rg1 := 11,0111 (- 0,1001)
Rg2 := 00,1110
Rg3 := 00,0000
L := 4

---

0. tsükkel:	**11,0111**	**(Rg1)**
	00,1110	**(+Rg2)**
	00,0101	**Rg3:=0,0001**
1. tsükkel:	**00,1010**	**(2(Rg1+Rg2))**
	11,0010	**(- Rg2)**
	11,1100	**Rg3:=0,0010**

2*Rg1 + Rg2

2. tsükkel:	**11,1000**	**(L1)**
	00,1110	**(+Rg2)**
	00,0110	**Rg3:=0,0101**

3. tsükkel:	**00,1100**	**(L1)**
	<u>11,0010</u>	**(- Rg2)**
	<u>11</u>,1110	**Rg3:=0,1010**
4. tsükkel:	**11,1100**	**(L1)**
	<u>00,1110</u>	**(+Rg2)**
	<u>00</u>,1010	**Rg3:=1,0101**

N: **Rg1 := 00,1001**
Rg2 := 11,0010
Rg3 = ?

0. tsükkel:	**00,1001**	**(Rg1)**
	<u>11,0010</u>	**(+Rg2)**
	<u>11</u>,1011	**Rg3:=0,0001**
1. tsükkel:	**11,0110**	**2*(Rg1+Rg2)**
	<u>00,1110</u>	**(- Rg2)**
	<u>00</u>,0100	**Rg3:=0,0010**
2. tsükkel:	**00,1000**	**(L1)**
	<u>11,0010</u>	**(+Rg2)**
	<u>11</u>,1010	**Rg3:=0,0101**

jne.

Kiire jagamine

$$Q = \frac{D}{S}$$ **D, S - murrud**

$$Q = \frac{D \cdot f_0 \cdot f_1 \cdot f_2 \ldots}{S \cdot f_0 \cdot f_1 \cdot f_2 \ldots}$$

Eesmärk : kui nimetaja $\rightarrow$ 1, siis lugeja = Q
S - murd $\Rightarrow$ S = 1-x, kus $|x| < 1$
Valime $f_0 = 2 - S = 2 - (1 - x) = 1 + x$

$S*f_o = (1 - x)(1 + x) = 1 - x^2$
$1 - x^2$ on lähemal "1"-le
$f_1 = 1 + x^2 = 1 + (1 - S*f_0) = \underline{2 - S*f_0}$

t.k.

$S*f_0*f_1 = (1 - x^2)(1 - x^2) = 1 - x^4$
$f_2 = 1 + x^4 = 1 + (1 - S*f_0*f_1)$

$S*f_0*f_1*f_2 = (1 - x^4)(1 + x^4) = 1 - x^8$
jne.

$S*f_0*f_1*f_2* \ldots *f_k = ???$

Koondub kiiresti

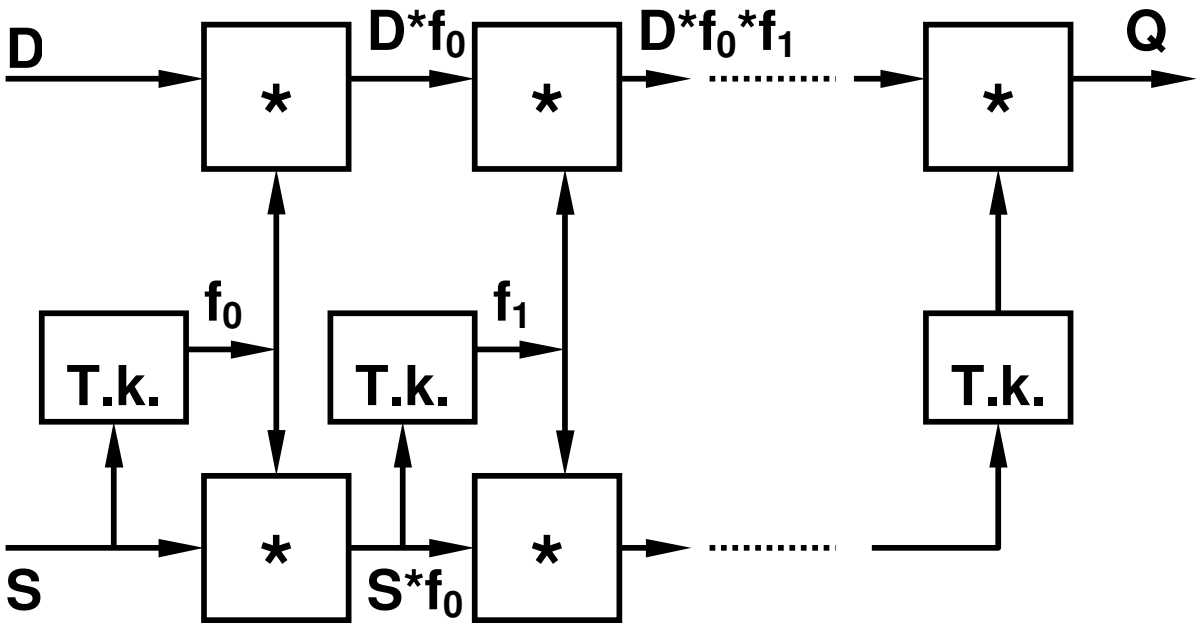

$f_0 = 2 - S$
$f_1 = 2 - S*f_0$
.
.
.
$Q = D*f_0* f_1* f_2* \ldots$

$f_4 = 1 - x^{32}$
.
.
.

Normaliseeritud mantisside puhul koondub kiiresti.

Kui $S \rightarrow 0$, on otstarbekas muuta f_0, f_1, …